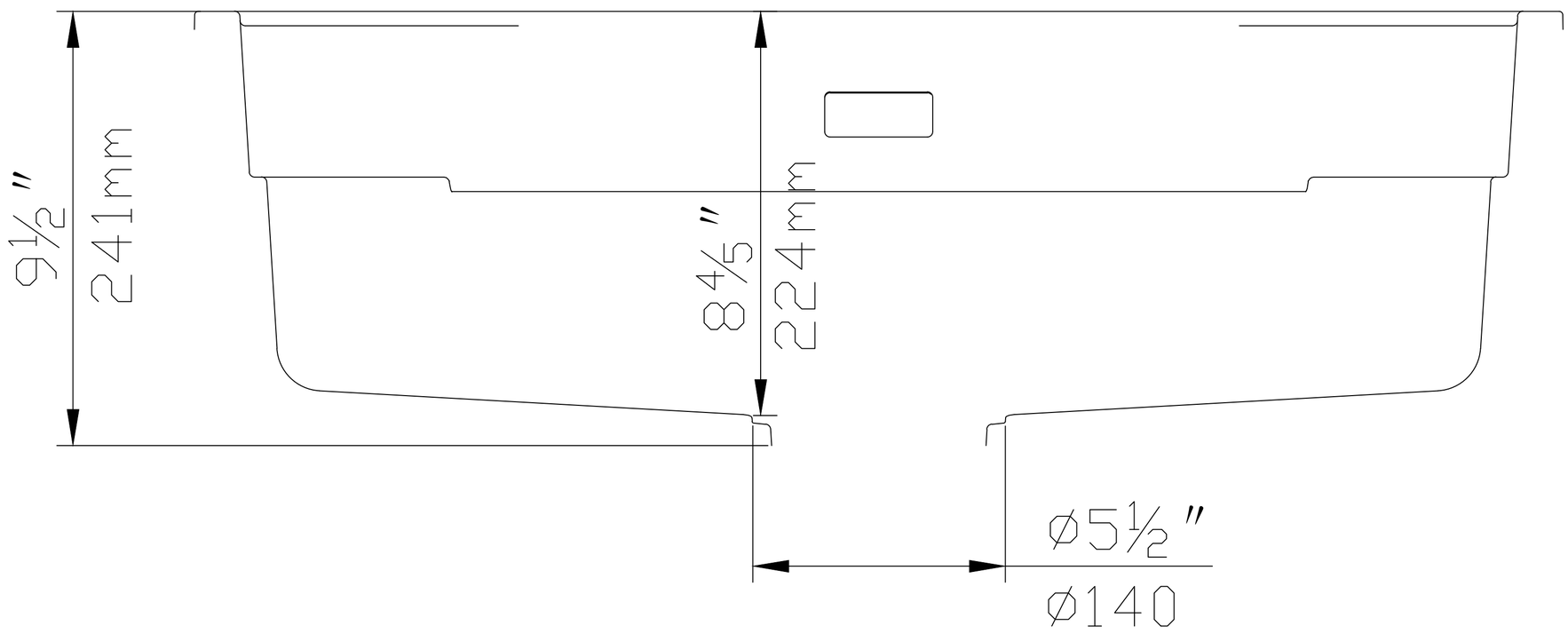
9½"
241mm
8⅘"
224mm
ø5½"
ø140

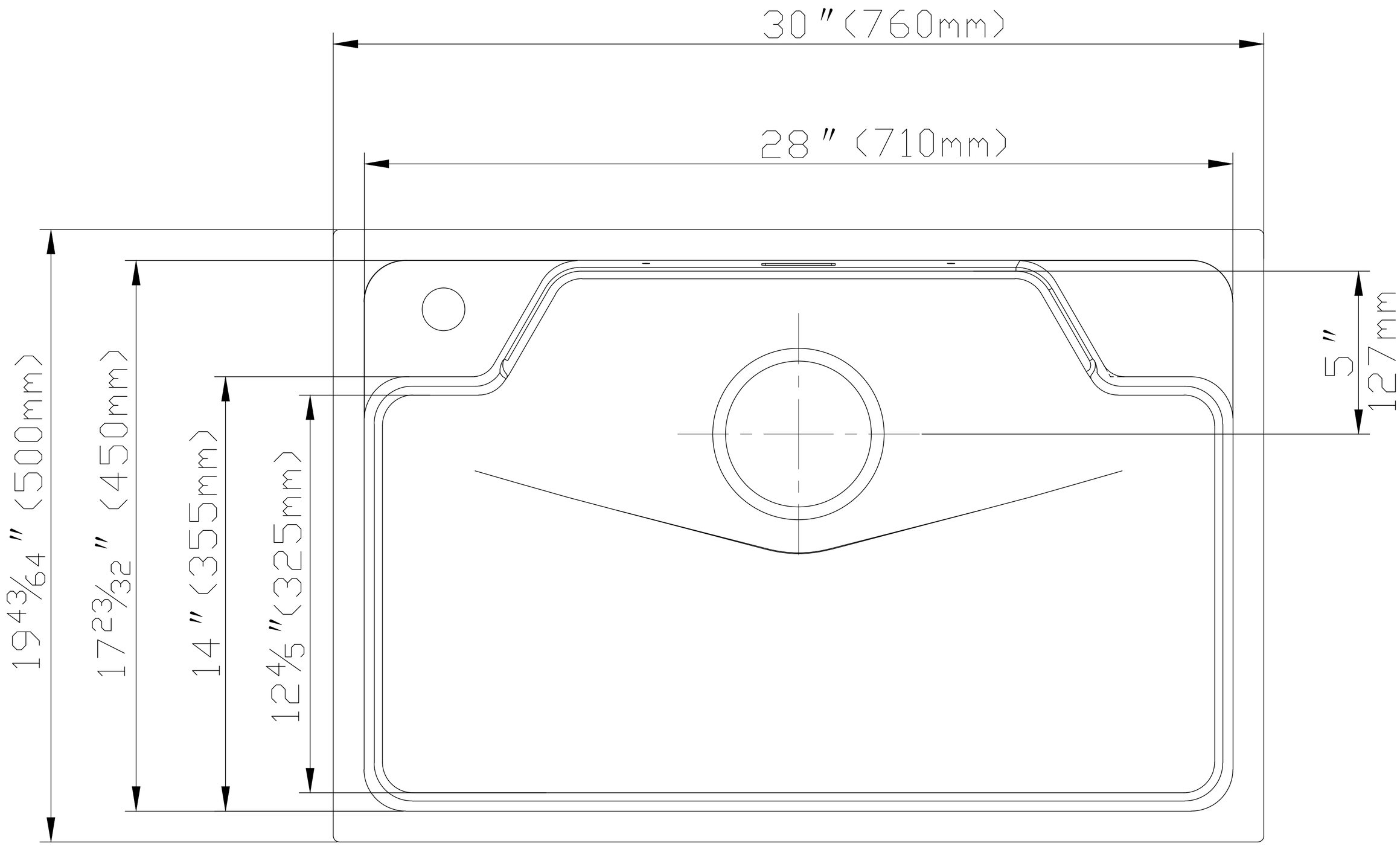
30" (760mm)
28" (710mm)
19 43/64" (500mm)
17 23/32" (450mm)
14" (355mm)
12 4/5" (325mm)
5"
127mm